Chapter V Machines for Pumping and Water Raising

Archimedean Snail

In ancient times a great deal of irrigation of dry land was done by raising water in the archimedean screw or archimedean snail.

Fig. 5/1 shows a simplified version of it that can be made very easily if a long length of flexible plastic tubing can be obtained. By wrapping the tubing around a wooden cylinder to form a spiral and mounting the axis of the cylinder in bearings held in a suitable framework of wood or metal, we have the essential parts of an unusual type of pump or water raising device.

The axis of the cylinder needs to be inclined about 25°–30° to the horizontal and the lower end of the coil of pipe must dip into water as the cylinder is rotated. Water will then be forced up through the coil by the rotation and emerge from the top end of the coil of pipe whence it can be allowed to fall back into the rectangular tank—not shown—in which the model should be mounted.

Rotation of the whole coil in this model is effected by turning the crank at the right-hand end, this crank being attached to the axis of the coil. It should be remembered that the crank in this form was probably not known at the time when the snail pump was in general use. In those days the operator—usually a slave—turned the drum by treading with his feet on steps attached to the spindle while holding with his hands on a cross-bar fixed to the ground.

In ancient times another version of the archimedean screw was used for raising water. Usually this consisted of a large spiral screw that was rotated inside a fixed wooden casing suitably inclined to the horizontal. Sometimes casing and screw were rotated together. In either case the lower end of the screw was immersed in the water to be pumped and the water lifted to a height equal to the length of the cylinder multiplied by the sine of the angle of inclination to the horizontal.

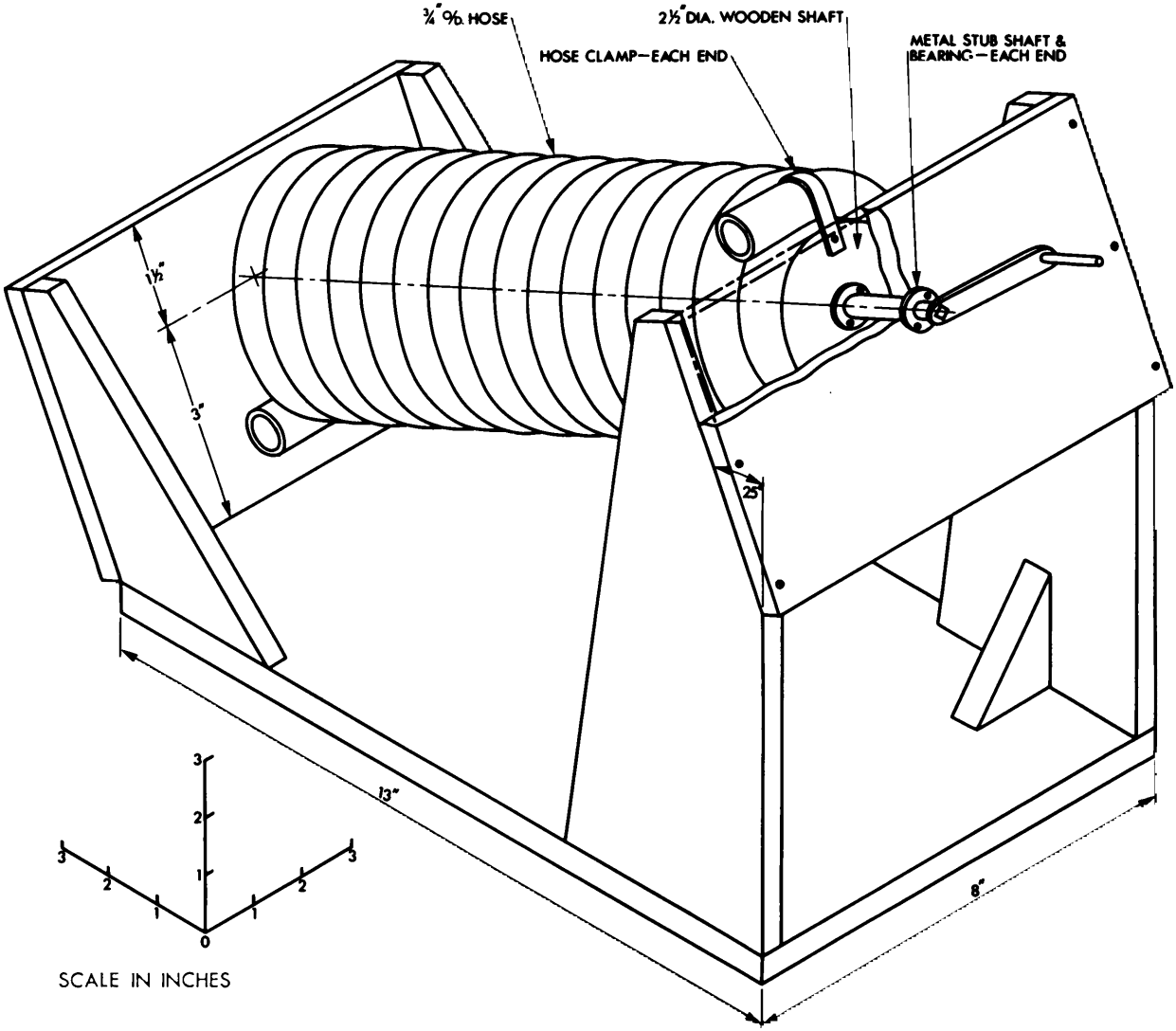

Fig. 5/1 Archimedean snail